Cat. No. 339–3

MINITYPE
5 PORT SOLENOID VALVE
TZ SERIES

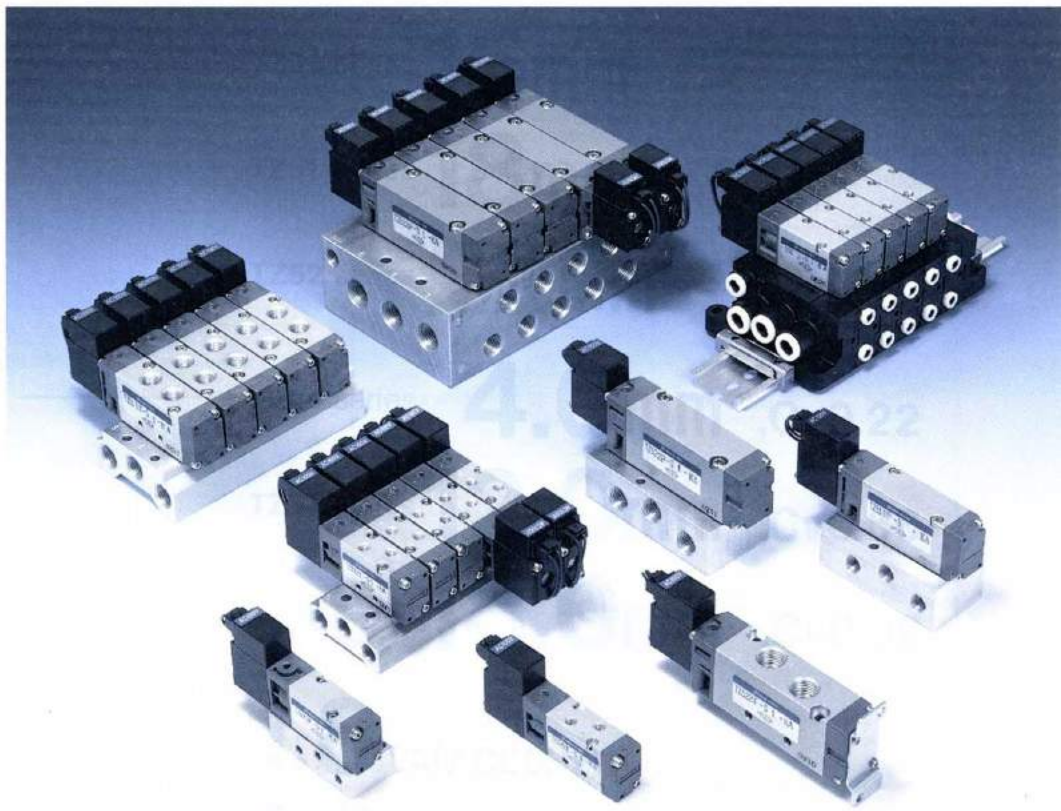

Mini Type-High Flow Rate-Low Power Consumption Precision processing is supported by wide variation of configurations.

For application in precision processing fields such as IC production and chip mounting lines, where sophisticated actuator control, high density mounting and space-saving around the line are required.
The TZ•Series are mini type 5-port solenoid operated valves which will meet the requirements of these lines.
These valves can be applied for drive control of air cylinders of up to ϕ100 bore.
They will fully meet the needs of the production lines which now require higher accuracy higher mounting density.

●Thin Type

Valve width — **TZ50** series **15mm**
TZ51 series **18mm**
TZ52 series **22mm**

●High Flow Rate

Effective sectional area — **TZ50** series **4.0mm², Cv0.22**
TZ51 series **12.0mm², Cv0.66**
TZ52 series **18.0mm², Cv0.99**

●Low Power Consumption

1.8 VA(AC60Hz)
1.6 W(DC)

●Wide Variation

2-position/single-solenoid, double-solenoid.
3-position/closed-center,. exhaust-center, pressured-center.
Direct piping type, base mount type.
Top connection type manifold (Direct piping type).
Side connection type manifold (Base mount type).
DIN connector, side plug connector, lead wire type.
With indicator lamp.
With indicator lamp + surge absorber.

● CONSTRUCTION AND MAIN PARTS

Single-Solenoid S

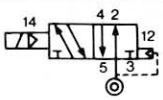

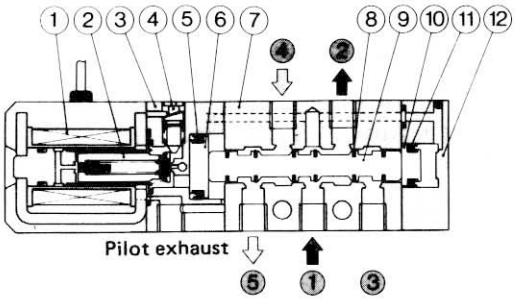

Note: Figure shows direct piping type.

Double Solenoid D

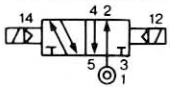

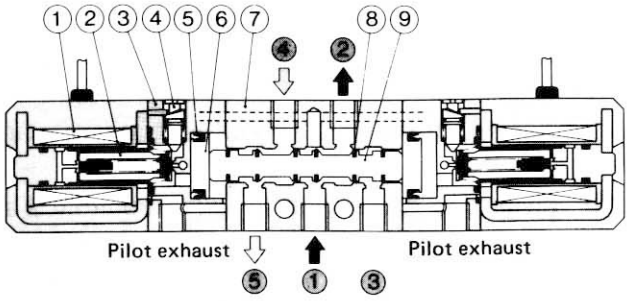

Closed-Center DC

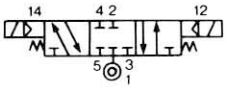

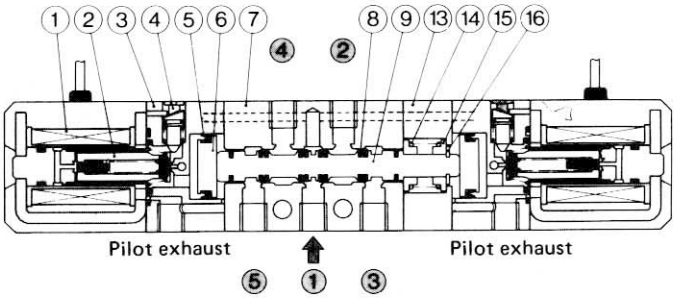

*: The exhaust-center (DE) type and pressured-center (DP) type are the same as the closed-center (DC) type except for a different spool.

Main Parts

Part Name	Material	Part Name	Material
1. Coil Assembly	Resin, etc	9. Spool	Aluminium alloy
2. Plunger assembly	Stainless steel, etc	10. Small-diameter piston	Resin
3. Pilot Body	Resin	11. Small-diameter piston seal	Synthetic rubber
4. Manual override button	Resin	12. Single cover	Resin
5. Piston packing	NBR	13. Position spacer	Aluminium alloy
6. Piston	Resin	14. Spring	Stainless steel
7. Valve body	Aluminium alloy	15. Spring guide	Resin
8. Spool seal	Synthetic rubber	16. E-type stop ring	Stainless steel

●Manual Override Control

Push Type (Reset type)
Screw Type (Hold type)
Combination Use

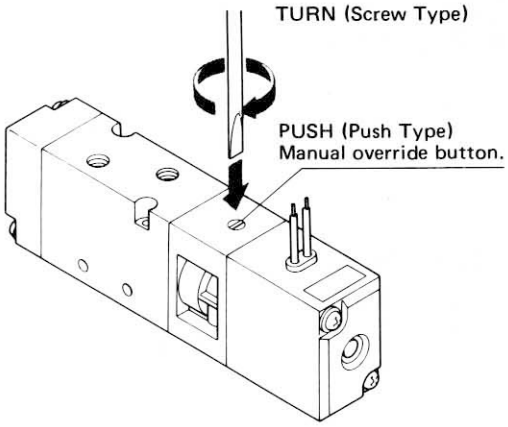

Note: When it is to be used as Screw Type, do not apply excessive force to turn the manual override button.

Twist Type

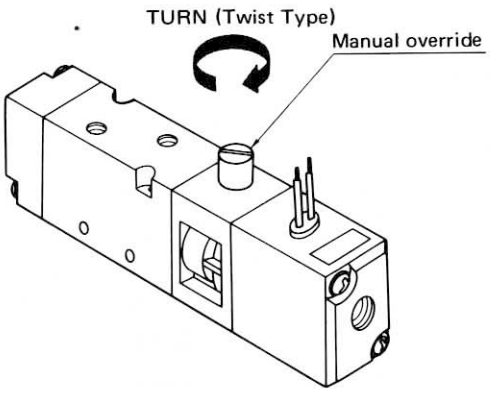

Note: ●Twist Type is provided only for TZ Series.

Mini Type 5-Port Solenoid Operated Valve

TZ SERIES

With Sub-plate or Without Sub-plate

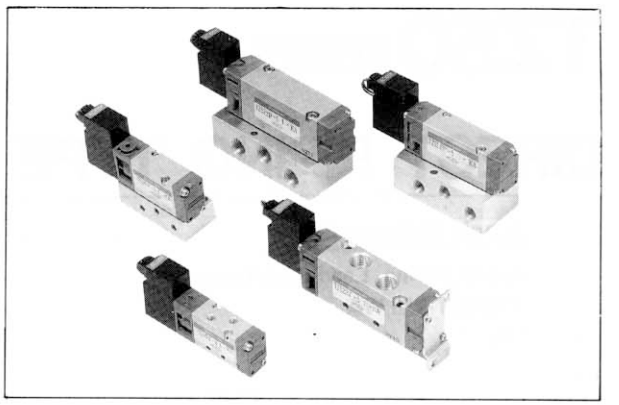

Type Designation (Example)

TZ50 * P - S1 - WA BB

(a)Series Name	Code	(b)Port φ	Code	(c)Piping Connection
TZ50	0	M5	T	Direct piping type
	*	Without sub-plate	P	Base mount type
	0	M5		
	1	Rc(PT)1/8		
TZ51	1	Rc(PT)1/8	T	Direct piping type
	*	Without sub-plate	P	Base mount type
	1	Rc(PT)1/8		
	2	Rc(PT)1/4		
TZ52	2	Rc(PT)1/4	T	Direct piping type
	*	Without sub-plate	P	Base mount type
	2	Rc(PT)1/4		

Classification	Code	(f) Additional specifications
Wiring system	WA	Lead-wire type
	KA	Side plug connector
	KN	Side plug connector with indicator lamp
	KE	Side plug connector with indicator lamp and surge absorber
	DA	DIN connector
	DN	DIN connector with indicator lamp
	* DF	DIN connector with indicator lamp and surge absorber (Fly-wheel diode)
	* KF	Side plug connector with indicator lamp and surge absorber (Fly-wheel diode)

*: DF and KF can be specified for DC 24V. (confirm the delivery period because these are quasi-standard products.)

Classification	Code	(g) Additional specifications
Mounting Bracket	No code	Without
	BB*	With fitting
Manual override	No code	Standard type
	T	Twist type

*: Can be specified only for direct-piping single-solenoid type.

Code	Number of positions	(d) Control Mode	JIS Symbol
S	2-position	Single-solenoid	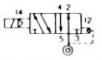
D		Double-solenoid	
DC	3-position	Closed-center	
DE		Exhaust-center	
DP		Pressured-center	

Code	(d)Voltage
1	AC100V50/60Hz
2	AC200V50/60Hz
3	DC24V
4	DC12V
9C	AC24V50/60Hz
9D	AC110V50/60Hz
9H	AC220V50/60Hz

●Option

〈Mounting Bracket〉 The direct-piping single-solenoid type can be fixed to the base by the following fittings.

Type	Compatible valve
BB (500T)	TZ500T-S
BB (TZ511T)	TZ511T-S TZ522T-S

〈Block Plate〉 This is the blind plate for sealing of mounting surface of one valve.

Type	Compatible base
BP-TZ50P	P (TZ50□P)
BP-TZ51P	P (TZ51□P)
BP-TZ52P	P (TZ522P)

●Sub-plate Type

Type	Port φ	
	Input-Output-Exhaust	Pilot exhaust
P (TZ500P)	M5	M5
P (TZ501P)	Rc (PT)1/8	M5
P (TZ511P)	Rc (PT)1/8	M5
P (TZ512P)	Rc (PT)1/4	M5
P (TZ522P)	Rc (PT)1/4	M5

●Specifications

Fluids		Air, neutral gas		
Service pressure		0.15～0.78MPa (1.5～8kg/cm²G)		
Temperature		Ambient: 5～50°C Fluid: 5～50°C		
Valve construction		5-port pilot type, soft-seal spool		
Piping connection		Direct piping type	Base mount type	
Port φ	TZ 50	M5	M5	Rc(PT)1/8
	TZ 51	Rc(PT)1/8	Rc(PT)1/8	Rc(PT)1/4
	TZ 52	Rc(PT)1/4		
Pilot exhaust	Direct piping type	Individual exhaust		
	Base mount type	Collective exhaust		
Effective Sectional area (Cv factor)	TZ 50	4mm² (0.22)	3.4mm² (0.18)	4mm² (0.22)
	TZ 51 2-position	12mm² (0.66)	10mm² (0.55)	
	TZ 51 3-position	10mm² (0.55)	8mm² (0.44)	
	TZ 52 2-position	18mm² (0.99)	15mm² (0.82)	
	TZ 52 3-position	15mm² (0.82)	13mm² (0.72)	
Manual override *		Push Type (Reset type) Screw Type (Hold type) Twist Type (Hold type)	Combination type is standard. Option	

●Solenoid Specifications

Voltage	1 : AC100V 50/60Hz 2 : AC200V 50/60Hz 3 : DC24V 4 : DC12V 9C : AC24V 50/60Hz 9D : AC110V 50/60Hz 9H : AC220V 50/60Hz
Permissible voltage fluctuation	Within ±10%
Power consumption	AC: 50Hz 2.1VA 60Hz: 1.8VA
Insulation class	B Class
Wiring method	WA: Lead wire type (With lead wire AWG22 x 300mm) KA: Side plug connector (With lead wire AWG24 x 300mm) DA: DIN connector
Color code of lead wire	AC 100V: Blue AC 200V: Red DC 24V: Black DC 12V: Yellow
Power ON indicator lamp	AC: Neon lamp DC: LED
Surge absorber	ZNR or Fly-wheel diode

TZ50 SERIES

DIRECT PIPING TYPE

Single Solenoid S

Direct Piping, Lead-wire Type
TZ500T-S□ WA
M5

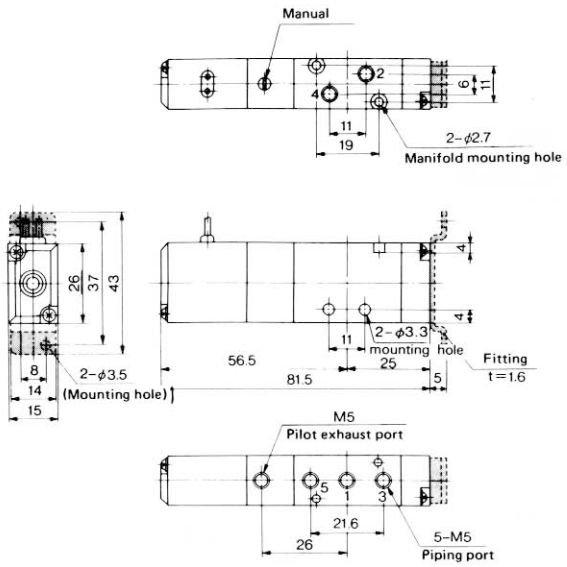

Weight: 85 g

Double Solenoid D

Direct Piping, Lead-wire Type
TZ500T-D□ WA
M5

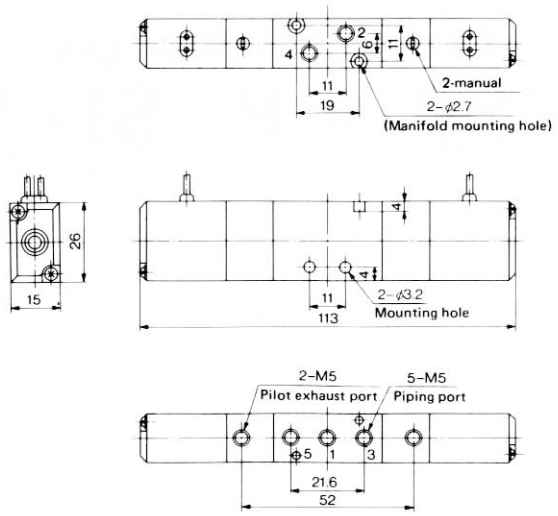

Weight: 130g

●Dimensions of Side Plug Connector

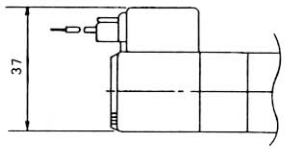

●Dimensions of DIN Connector

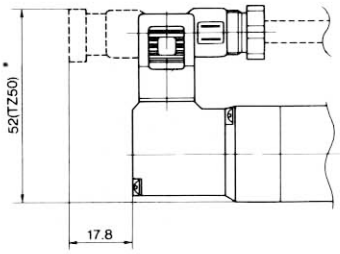

Cord diameter: 4mm~6.5mm
Recommended size: 0.5mm²

Vinyl cabtyre round cord
VCTF 2 cores: 0.75mm² or less

Closed Center DC
Exhaust Center DE
Pressured Center DP

Direct piping, Lead-wire Type
TZ500T-DC□ WA
TZ500T-DE□ WA
TZ500T-DP□ WA

M5

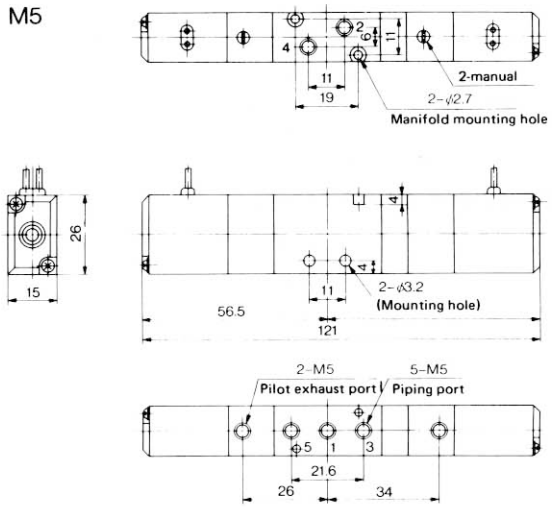

Weight 135g

TZ50 SERIES

BASE MOUNT TYPE

Base Mount, Lead-wire Type
TZ50 □ P-S □ WA
M5, Rc(PT)1/8

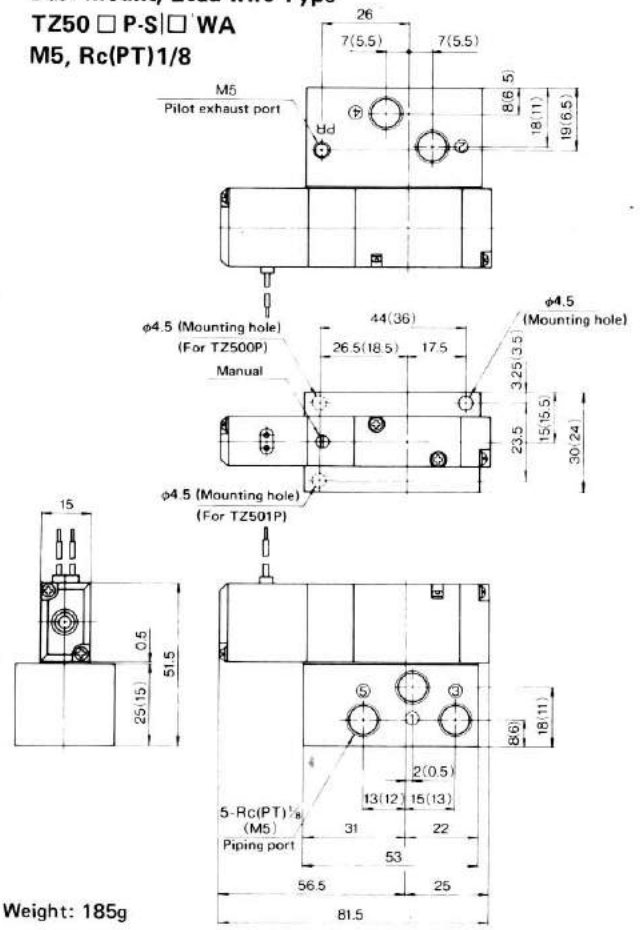

Weight: 185g

Base Mount, Lead-wire Type
TZ50 □ P-D □ WA
M5, Rc(PT)1/8

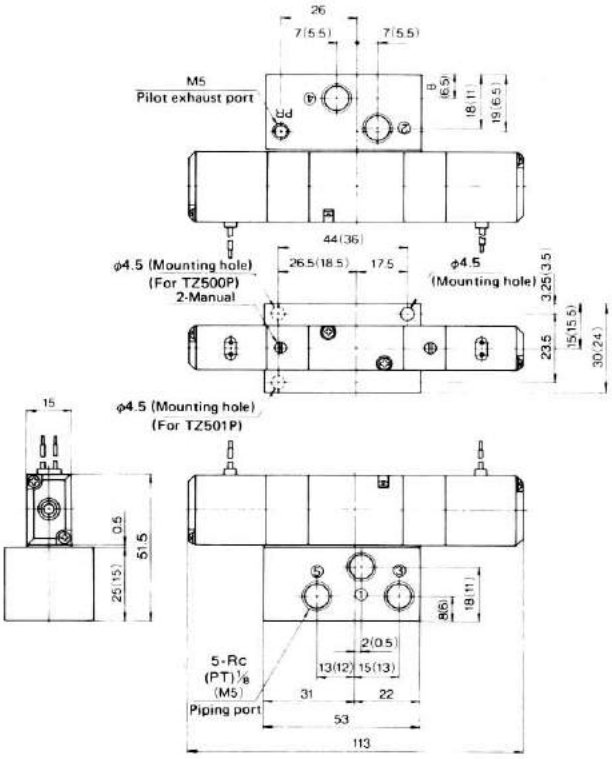

Weight: 230g

Base Mount, Lead-wire Type
TZ50 □ P-DC □ WA
TZ50 □ P-DE □ WA
TZ50 □ P-DP □ WA
M5, Rc(PT)1/8

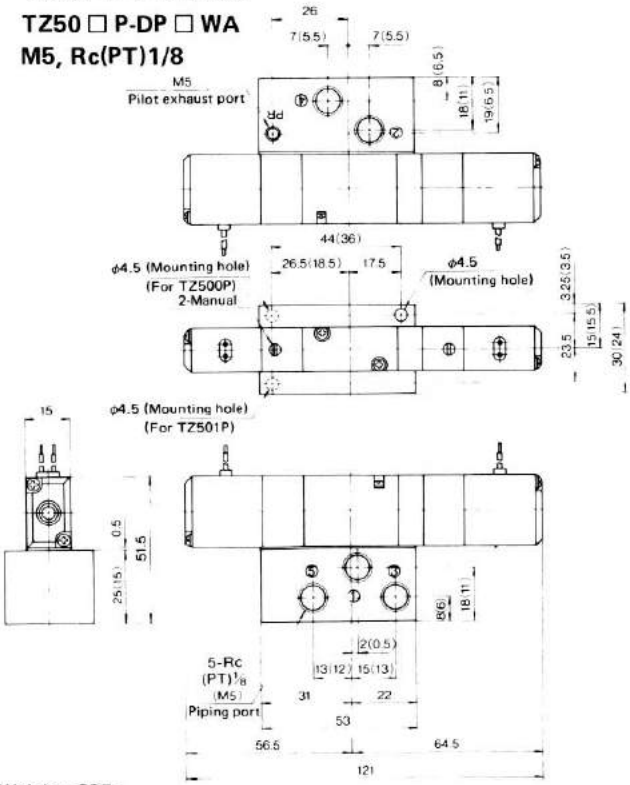

Weight: 235g

•Dimensions of Side Plug Connector

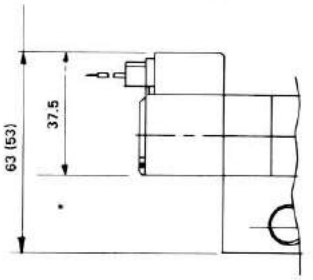

•Dimensions of DIN Connector

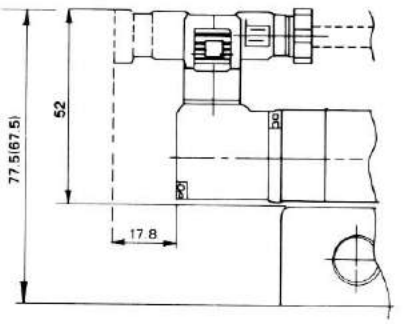

Cord diameter: 4mm~6.5mm
Recommended size: 0.5mm²

Vinyl cabtyre round cord
VCTF 2cores: 0.75mm² or less

Figure in ( ) indicates port φ or dimension for M5.

TZ51 SERIES

DIRECT PIPING TYPE

Single Solenoid S

Direct Piping, Lead-wire Type
TZ511T-S□WA
Rc(PT)1/8

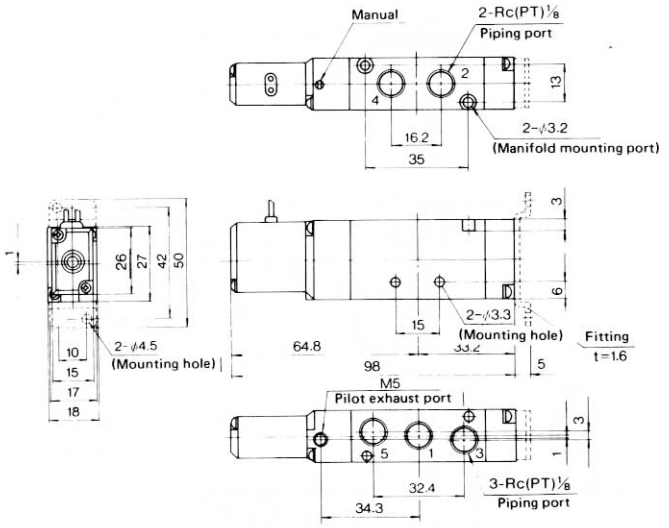

Weight: 100g

Double Solenoid D

Direct Piping, Lead-wire Type
TZ511T-D□WA
Rc(PT)1/8

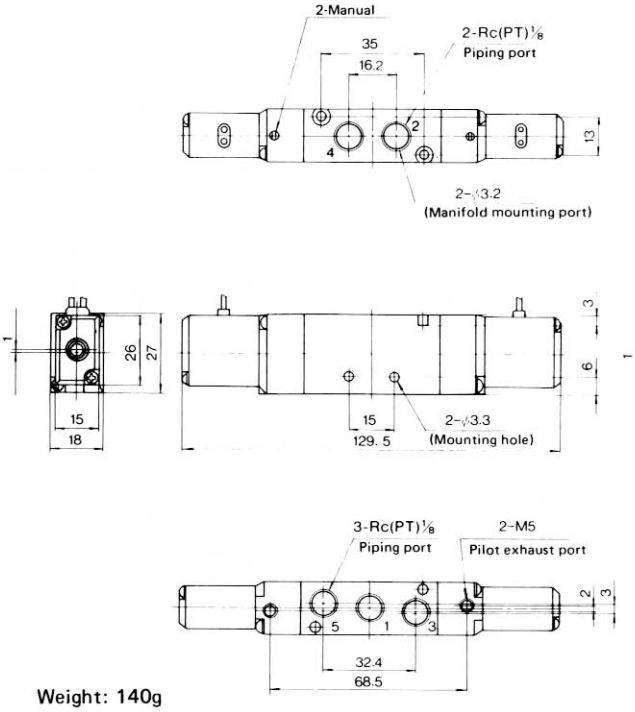

Weight: 140g

Closed Center DC
Exhaust Center DE
Pressured Center DP

Direct Piping, Lead-wire Type
TZ511T-DC□WA
TZ511T-DE□WA
TZ511T-DP□WA
Rc(PT)1/8

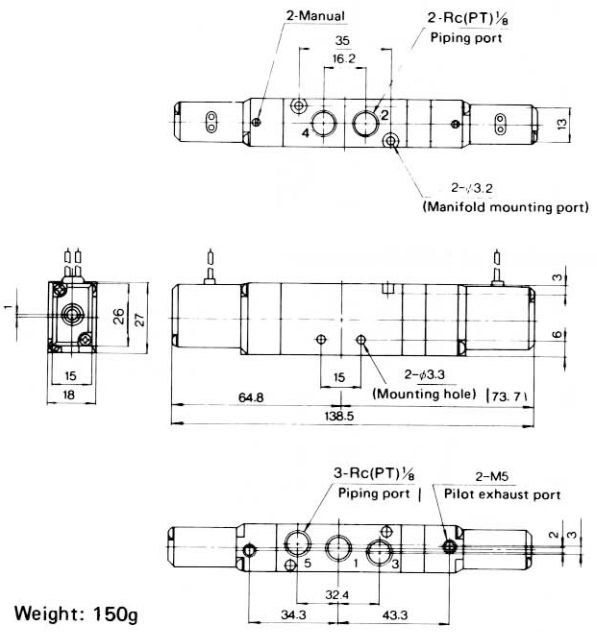

Weight: 150g

●Dimensions of Side Plug Connector

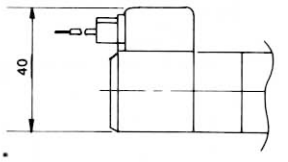

●Dimensions of DIN Connector

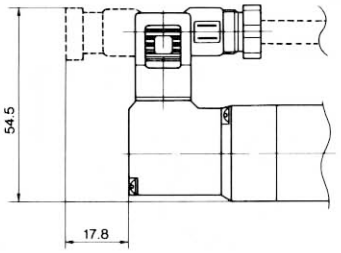

Cord diameter: 4mm~6.5mm
Recommended size: 0.5mm²

Vinyl cabtyre round cord
VCTF 2cores: 0.75mm² or less

TZ51 SERIES

BASE MOUNT TYPE

Base Mount, Lead-wire Type
TZ51□ P-S□ WA
Rc(PT)1/8, Rc(PT)1/4

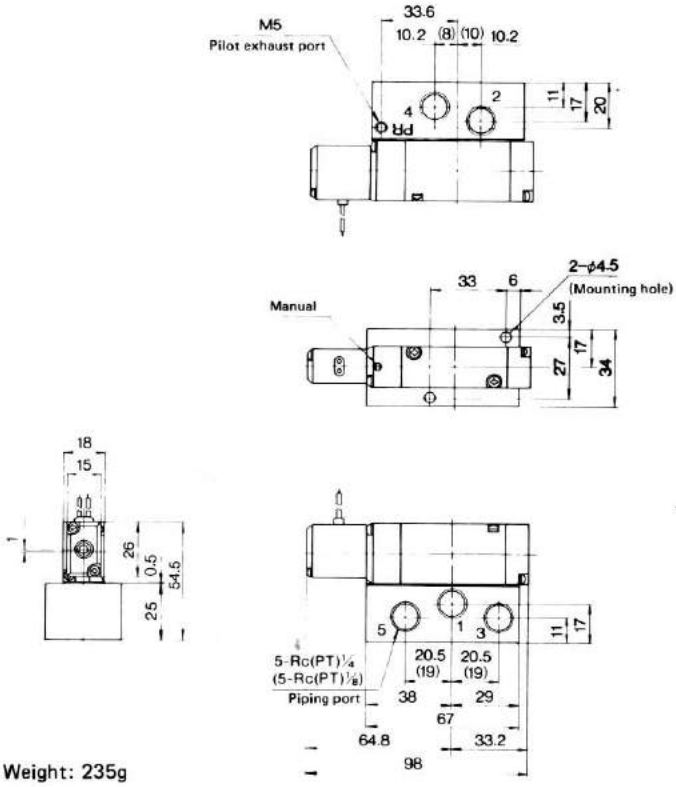

Weight: 235g

Base Mount, Lead-wire Type
TZ51□P-D□ WA
Rc(PT)1/8, Rc(PT)1/4

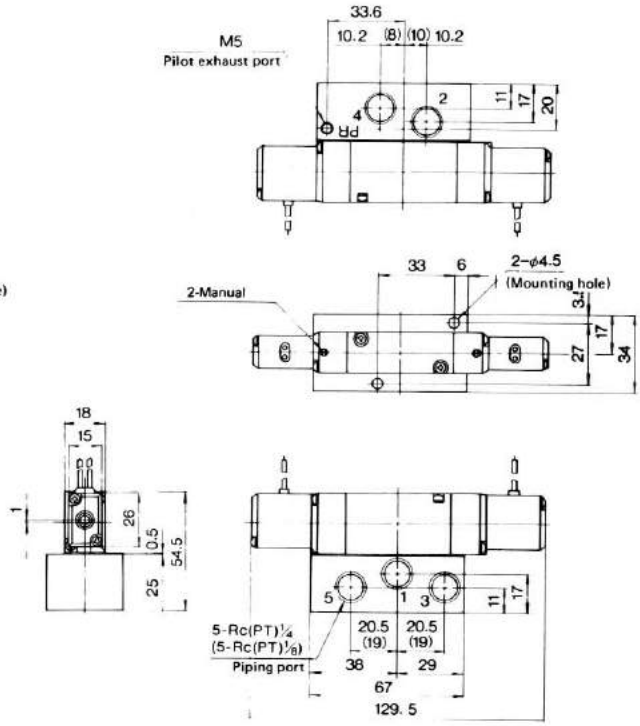

Weight: 275g

Base Mount, Lead-wire Type
TZ51□P-DC□ WA
TZ51□P-DE□ WA
TZ51□P-DP□ WA
Rc(PT)1/8, Rc(PT)1/4

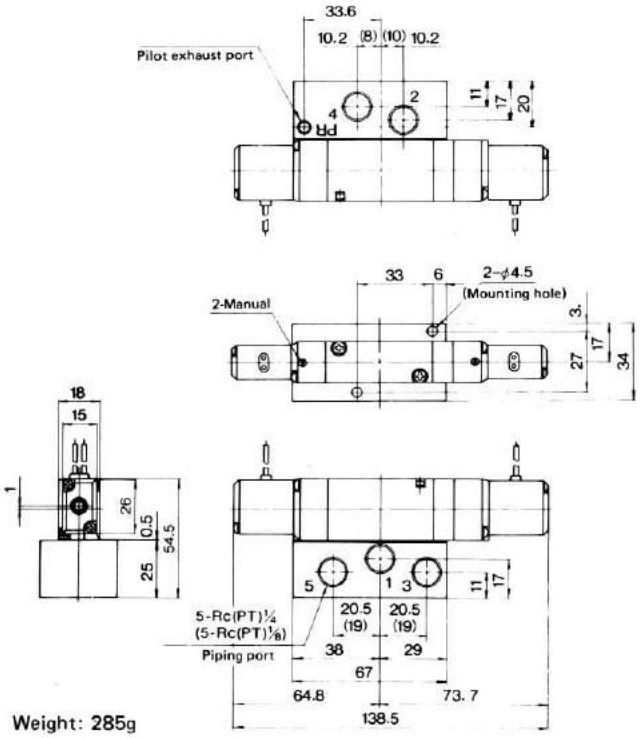

Weight: 285g

●Dimensions of Side Plug Connector

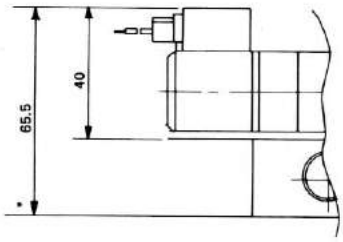

●Dimensions of DIN Connector

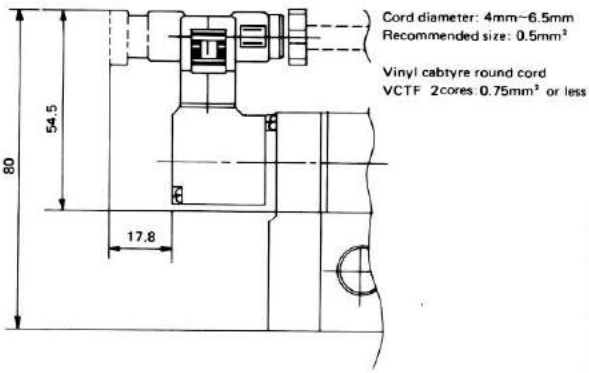

TZ52 SERIES

DIRECT PIPING TYPE

Single Solenoid S

Direct Piping, Lead-wire Type
TZ522T-S□-WA
Rc(TP)1/4

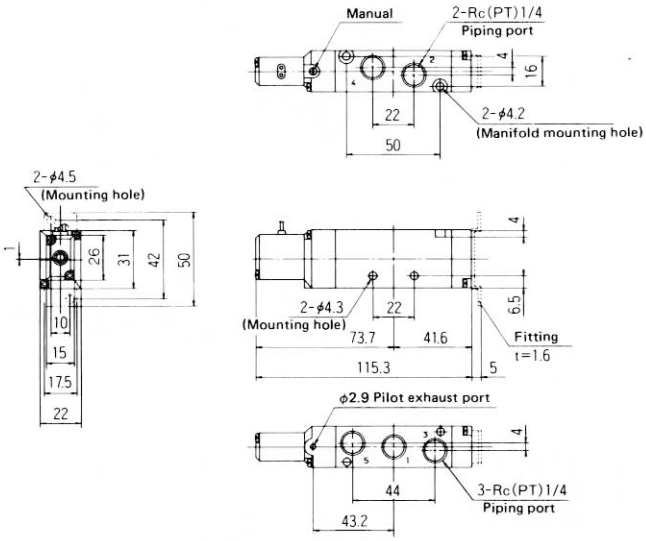

Double Solenoid D

Direct Piping, Lead-wire Type
TZ522T-D□- WA
Rc(PT)1/4

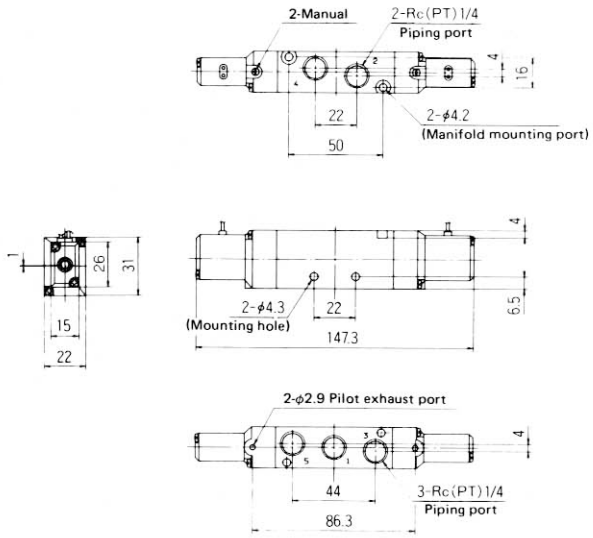

Closed Center DC
Exhaust Center DE
Pressured Center DP

Direct Piping, Lead-wire Type
TZ522T-DC□- WA
TZ522T-DE□- WA
TZ522T-DP□- WA
Rc(PT)1/4

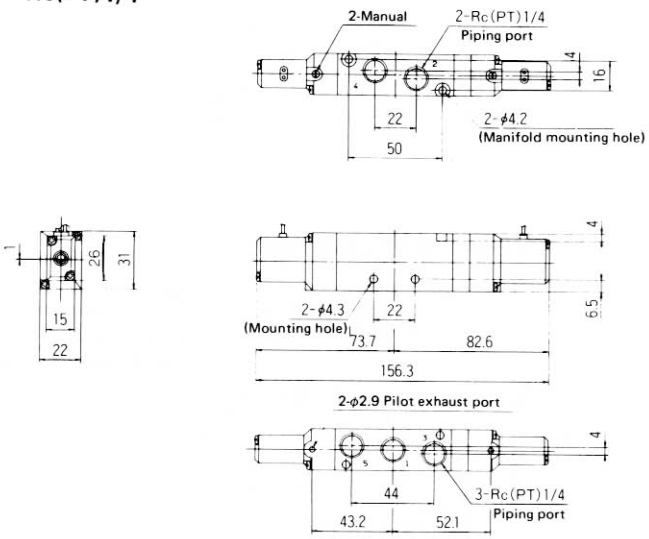

●Dimensions of Side Plug Connector

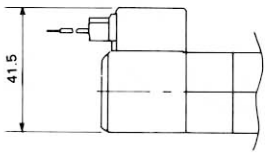

●Dimensions of DIN Connector

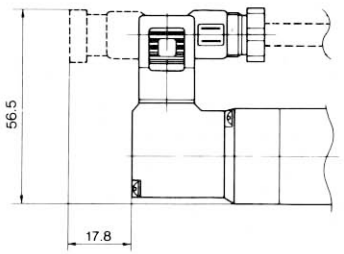

Cord diameter: 4mm~6.5mm
Recommended size: 0.5mm²

Vinyl cabtyre round cord
VCTF 2cores: 0.75mm² or less

TZ52 SERIES

BASE MOUNT TYPE

Base Mount, Lead-wire Type
TZ522P-S□-WA
Rc(PT)1/4

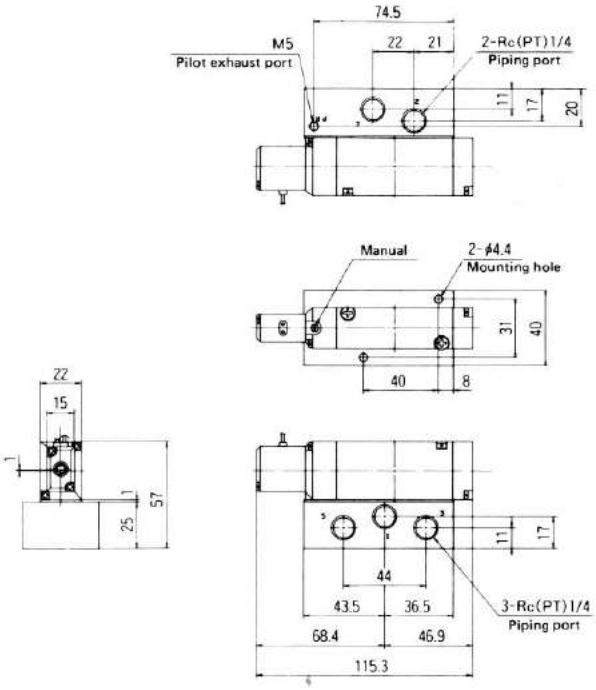

Base Mount, Lead-wire Type
TZ522P-D□-WA
Rc(PT)1/4

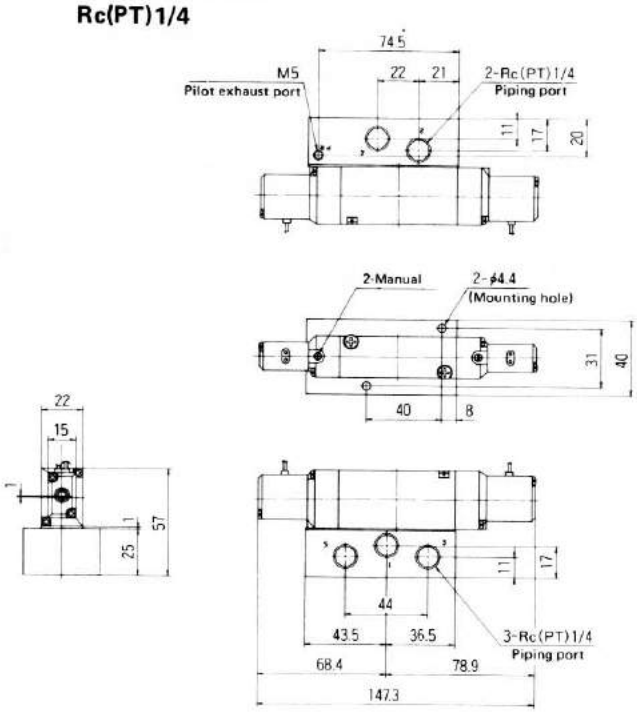

Base Mount, Lead-wire Type
TZ522P-DC□-WA
TZ522P-DE□-WA
TZ522P-DP□-WA
Rc(PT)1/4

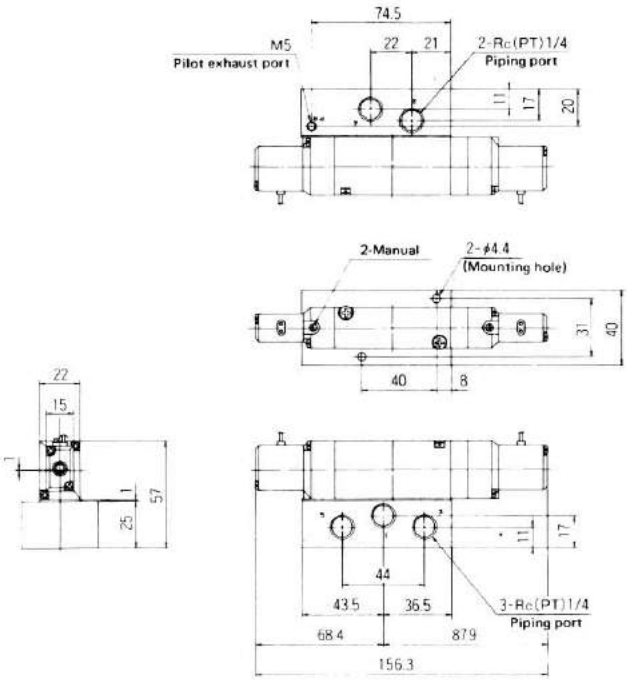

•Dimensions of Side Plug Connector

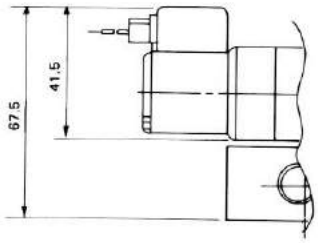

•Dimensions of DIN Connector

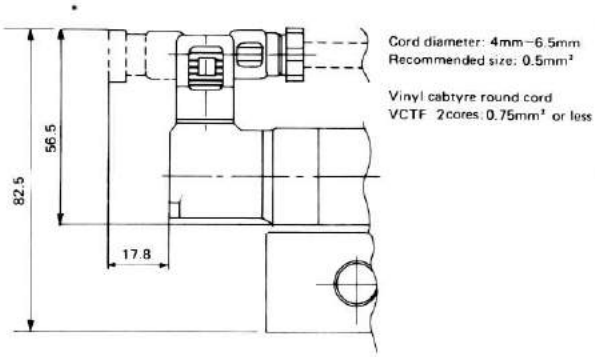

Mini Type 5-Port Solenoid Operated Valve

TZ SERIES

With Manifold Base

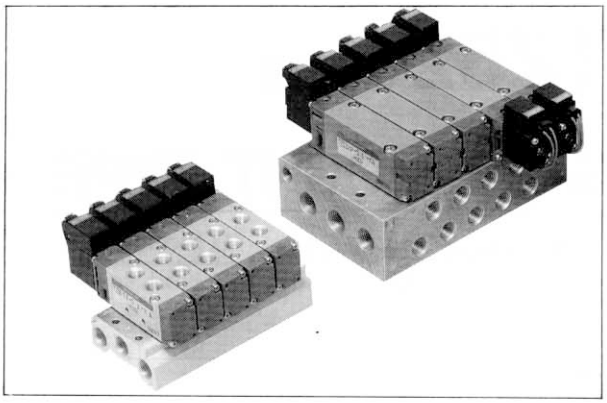

Type Designation(Example)

TZ50 0 P - S1 - WA T - 10DM

(a)Series name	Code	(b)Port φ	Code	(c)Piping connection
TZ50	0	M5	T	Direct piping type
	0	M5	P	Base mount type
	1	Rc(RT)1/8		
TZ51	1	Rc(PT)1/8	T	Direct piping type
	1	Rc(PT)1/8	P	Base mount type
	2	Rc(PT)1/4		
TZ52	2	Rc(PT)1/4	T	Direct piping type
			P	Base mount type

Classification	Code	(f) Additional specifications
Wiring system	WA	Lead-wire type
	KA	Side plug connector
	KN	Side plug connector with indicator lamp.
	KE	Side plug connector with indicator lamp and surge killer.
	DA	DIN connector
	DN	DIN connector with indicator lamp.
	• DF	DIN connector with indicator lamp and surge absorber (Fly-wheel diode).
	• KF	Side plug connector with indicator lamp and surge absorber (Fly-wheel diode).

• : DF and KF can be specified for 24V. (Confirm the delivery period because these are quasi-standard products.

Classification	Code	(g) Additional specifications
Manual override	No code	Standard type
	T	Twist type

Code	Number of positions	(d)Control Mode	JIS Symbol
S	2-position	Single-solenoid	
D		Double-solenoid	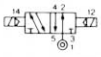
DC	3-position	Closed-center	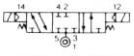
DE		Exhaust-center	
DP		Pressured-center	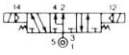

Code	(d)Voltage
1	AC100V50/60Hz
2	AC200V50/60Hz
3	DC24V
4	DC12V
9C	AC24V50/60Hz
9D	AC110V50/60Hz
9H	AC220V50/60Hz

●Manifold Base Type

〈Direct Piping Type〉

Type	Input-Exhaust Port φ
nTM (TZ500T)	Rc (PT)1/8
nTM (TZ511T)	Rc (PT)1/4
nTM(TZ522T)	Rc (PT)1/4

●Specify number of bases (2~20) for "n".

〈Base Mount Type〉

Type	Port φ		
	Output	Input-Exhaust	Pilot exhaust
nDM (TZ500P)	M5	Rc(PT)1/8	M5
nDM (TZ501P)	Rc(PT)1/8	Rc(PT)1/8	M5
nDM (TZ511P)	Rc(PT)1/8	Rc(PT)1/4	M5
nDM (TZ512P)	Rc(PT)1/4	Rc(PT)1/4	M5
nDM (TZ522P)	Rc(PT)1/4	Rc(PT)3/8	M5

●Specify number of bases (2~20) for "n".

〈Block Plate〉

This is the blind plate for sealing of valve base mounting surface.

Type	Compatible Base
BP-TZ50T	TM (TZ500T)
BP-TZ50P	DM (TZ50□P)
BP-TZ51T	TM (TZ511T)
BP-TZ51P	DM (TZ51□P)
BP-TZ52T	TM (TZ522T)
BP-TZ52P	DM (TZ522P)

Piping connection	Code	(h)Number of manifold bases.
Direct piping type (T)	2TM	2 bsses
	3TM	3bases
	⋮	⋮
	20TM	20 bases
Base mount type (P)	2DM	2 bases
	3DM	3 bases
	⋮	⋮
	20DM	20 bases

Note: Consult New-Era F-series when order involves mounting of two or two or more types of valves on the manifold base.

TZ50 SERIES

DIRECT PIPING TYPE

With Manifold Base

Direct Piping Type
M5

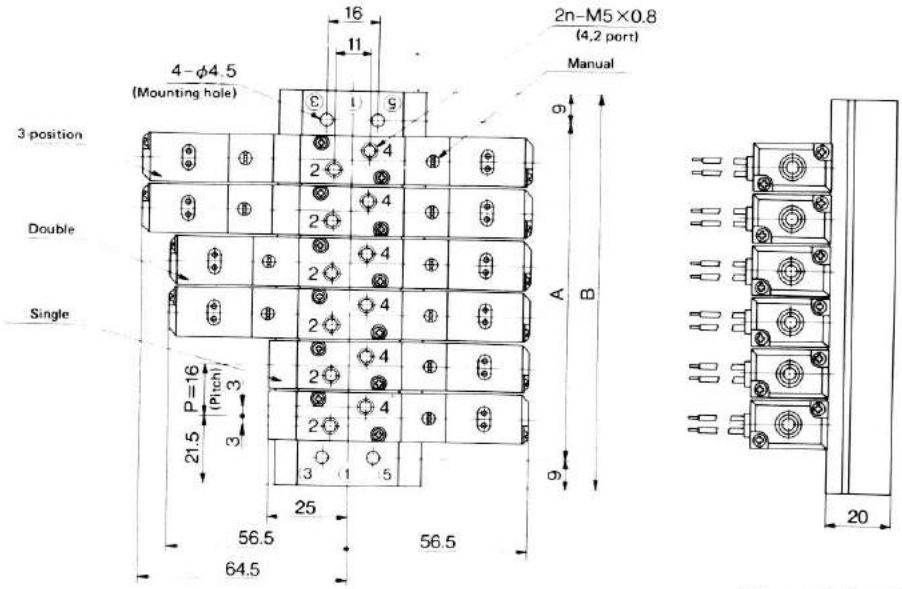

Lead-wire Type

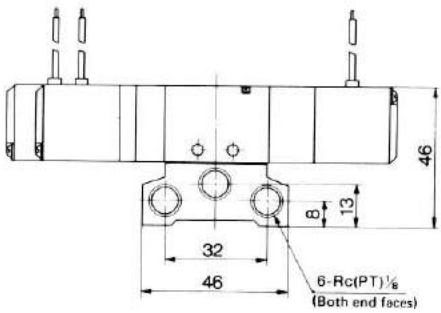

Side Plug Connector

Weight: -S 85g
-D 130g
-DE, -DC, -DP 135g

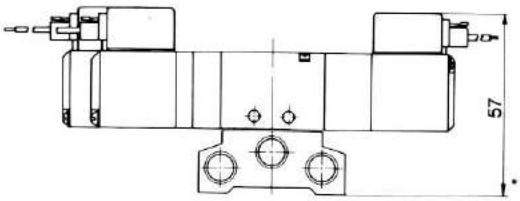

DIN Connector

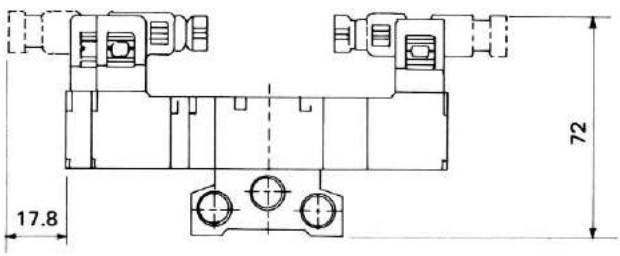

Direct Piping Type

Number of connected bases	Dimensions A	Dimensions B	Base weight g
2	41	59	100
3	57	75	130
4	73	91	160
5	89	107	190
6	105	123	220
7	121	139	250
8	137	155	280
9	153	171	310
10	169	187	340
11	185	203	370
12	201	219	400
13	217	235	430
14	233	251	460
15	249	267	490
16	265	283	520
17	281	299	550
18	297	315	580
19	313	331	610
20	329	347	640

TZ50 SERIES

BASE MOUNT TYPE

With Manifold Base

Base Mount Type
M5, Rc(PT)1/8

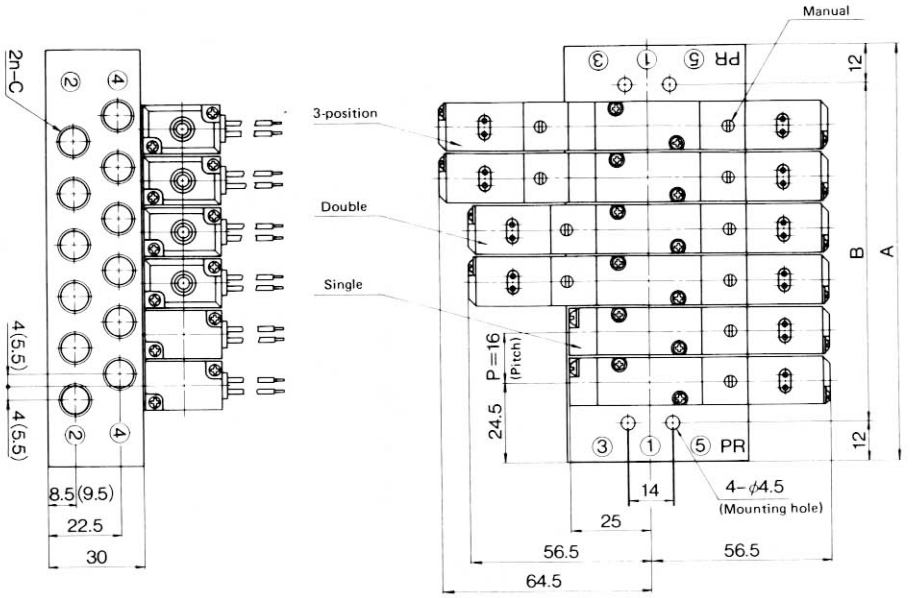

Weight: –S 85g
–D 130g
–DE, –DC, –DP 135g

Figure in ( ) indicates dimension for M5.

Lead-wire Type

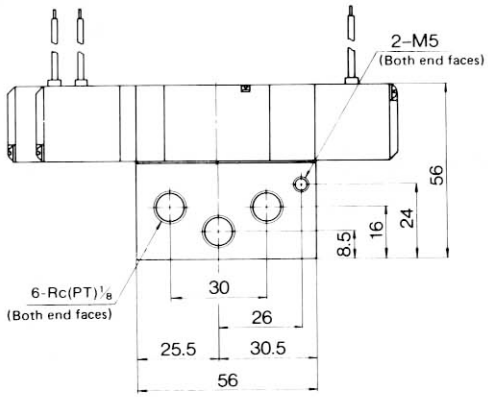

Side Plug Connector

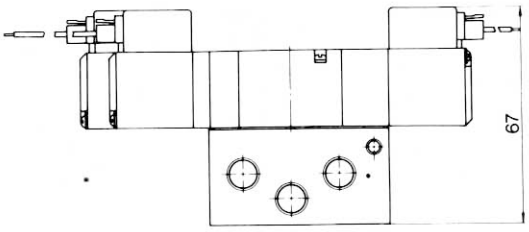

DIN Connector

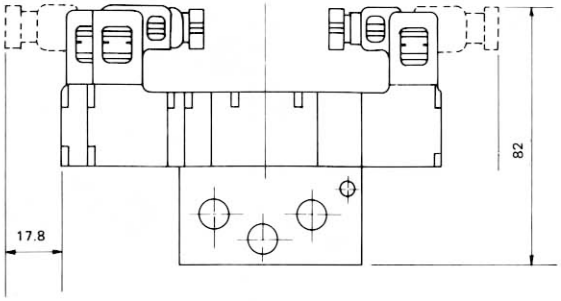

Sub-base Type

Number of sub-bases	Dimensions A	Dimensions B	Base weight g
2	65	41	290
3	81	57	360
4	97	73	430
5	113	89	500
6	129	105	570
7	145	121	640
8	161	137	710
9	177	153	780
10	193	169	850
11	209	185	920
12	225	201	990
13	241	217	1060
14	257	233	1130
15	273	249	1200
16	289	265	1270
17	305	281	1340
18	321	297	1410
19	337	313	1480
20	353	329	1550

Base Type	C
DM (TZ500P)	M5
DM (TZ501P)	Rc(PT)1/8

TZ51 SERIES

DIRECT PIPING TYPE

With Manifold Base

Direct Piping Type
Rc(TP)1/8

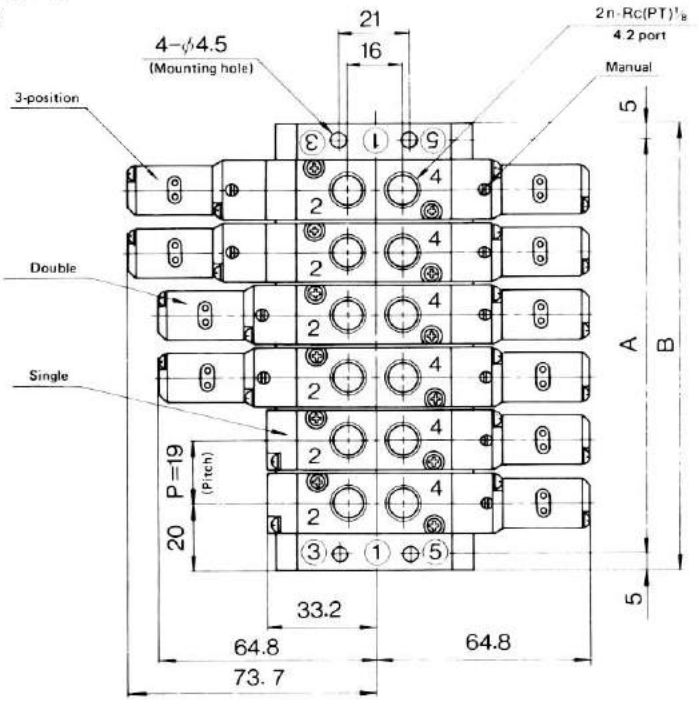

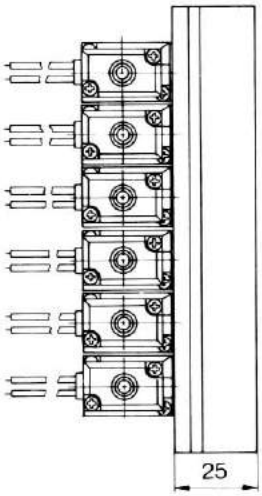

Direct Piping Type

Number of sub-bases	Dimensions		Base weight g
	A	B	
2	49	59	198
3	68	78	261
4	87	97	325
5	106	116	388
6	125	135	452
7	144	154	516
8	163	173	579
9	182	192	643
10	201	211	706
11	220	230	770
12	239	249	834
13	258	268	897
14	277	287	961
15	296	306	1024
16	315	325	1088
17	334	344	1152
18	353	363	1215
19	372	382	1279
20	391	401	1343

Lead-wire Type

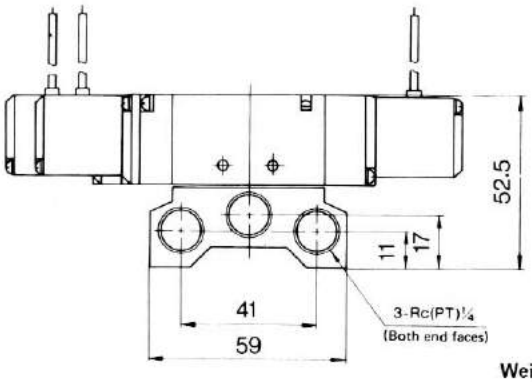

Weight: −S 100g
−D 140g
−DE, −DC, −DP 150g

Side Plug Connector

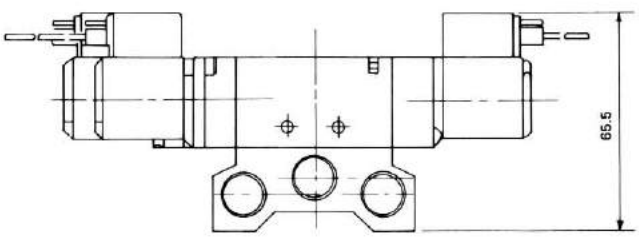

DIN Connector

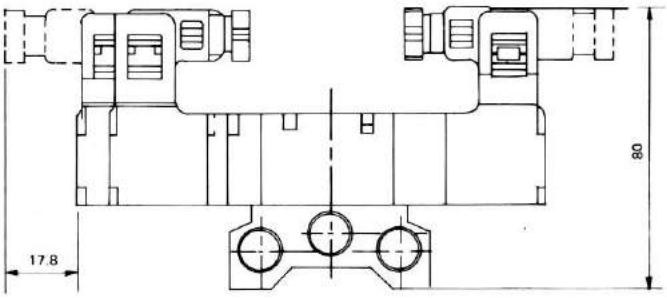

TZ51 SERIES

BASE MOUNT TYPE

With Manifold Base

Base Mount Type
Rc(PT)1/8, Rc(PT)1/4

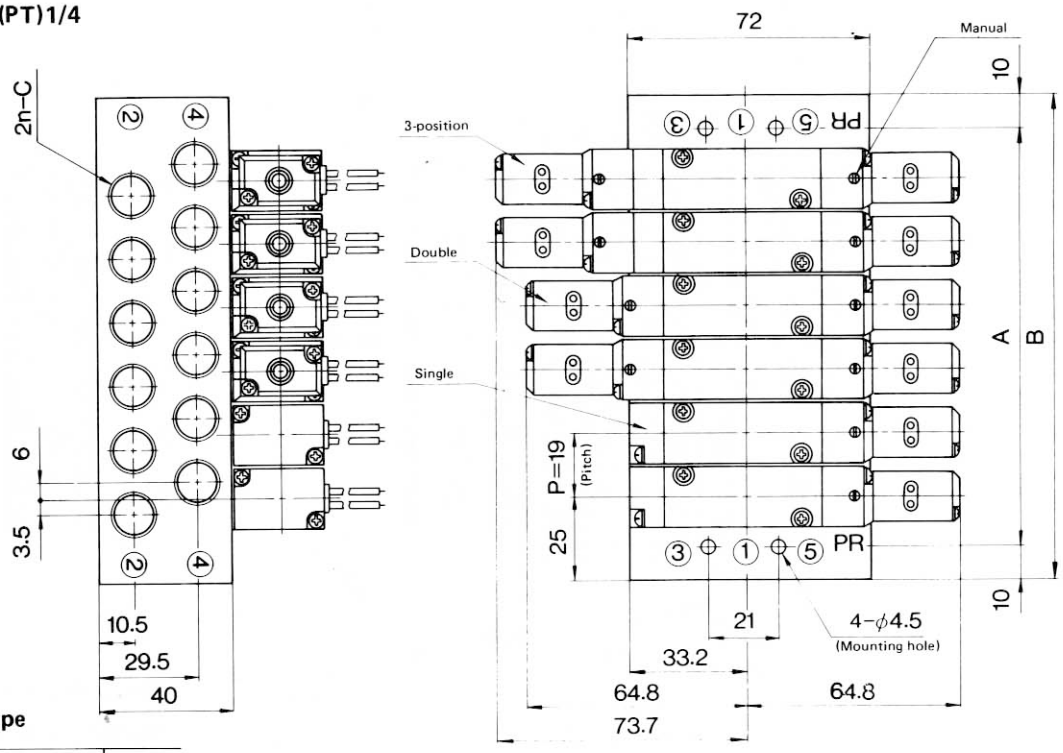

Sub-base Type

Number of sub-bases	Dimensions		Base weight g
	A	B	
2	49	69	510
3	68	88	650
4	87	107	790
5	106	126	930
6	125	145	1070
7	144	164	1210
8	163	183	1340
9	182	202	1490
10	201	221	1630
11	220	240	1770
12	239	259	1910
13	258	278	2050
14	277	297	2190
15	296	316	2330
16	315	335	2470
17	334	354	2610
18	353	373	2750
19	372	392	2890
20	391	411	3030

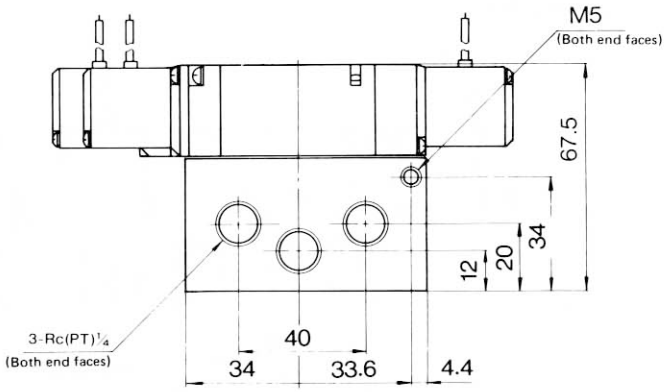

Lead-wire Type

Base Type	C
DM (TZ511P)	Rc(PT)1/8
DM (TZ512P)	Rc(PT)1/4

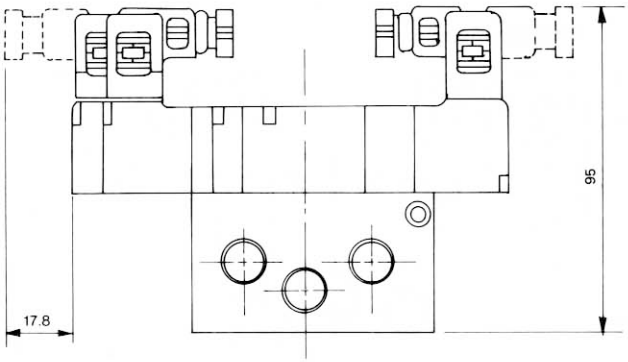

DIN Connector

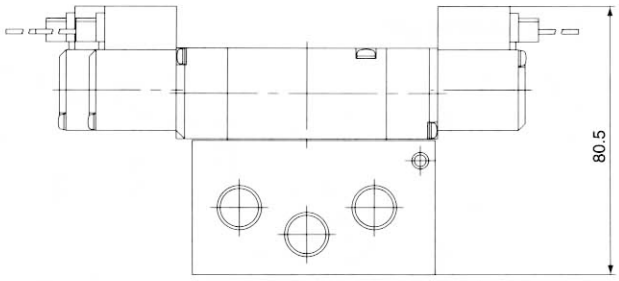

Side Plug Connector

TZ52 SERIES

DIRECT PIPING TYPE

With Manifold Base

Direct Piping Type
Rc(PT)1/4

Number of bases	Dimensions	
	A	B
2	63	77
3	86	100
4	109	123
5	132	146
6	155	169
7	178	192
8	201	215
9	224	238
10	247	261
11	270	284
12	293	307
13	316	330
14	339	353
15	362	376
16	385	399
17	408	422
18	431	445
19	454	468
20	477	491

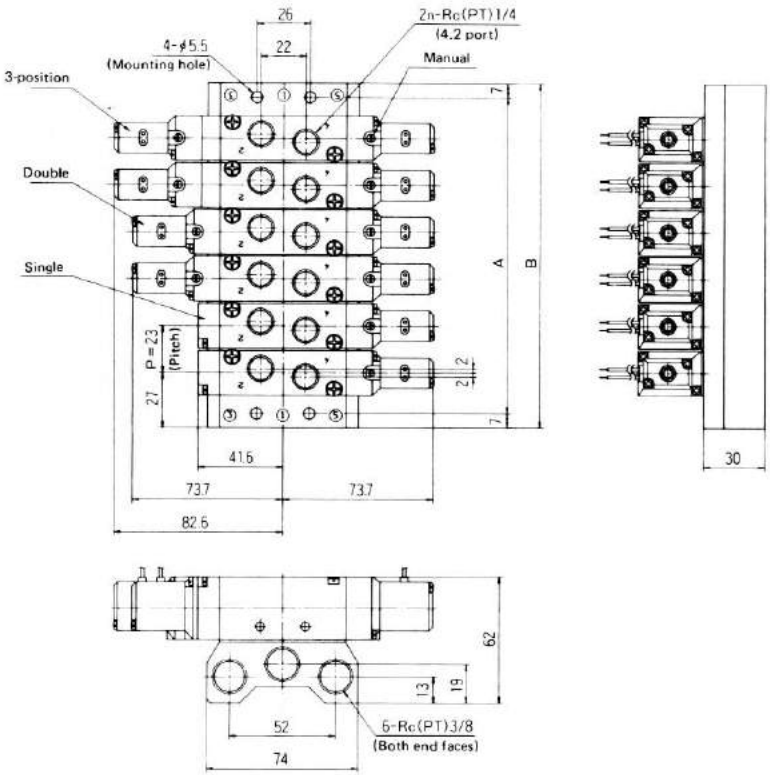

Lead-wire Type

Side Plug Connector

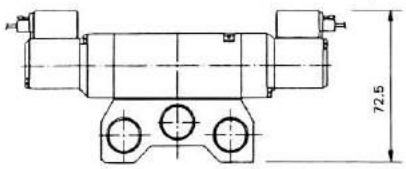

DIN Connector

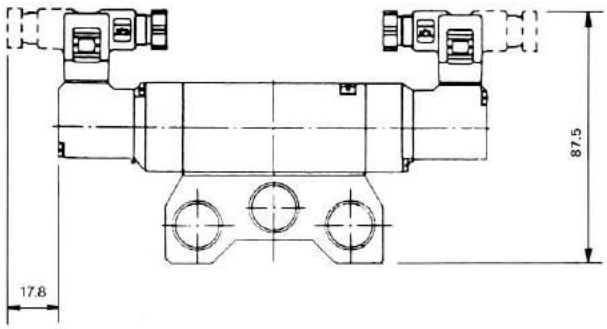

TZ52 SERIES

BASE MOUNT TYPE

With Manifold Base

Base Mount Type
Rc (PT) 1/4

Number of bases	Dimensions	
	A	B
2	67	85
3	90	108
4	113	131
5	136	154
6	159	177
7	182	200
8	205	223
9	228	246
10	251	269
11	274	292
12	297	315
13	320	338
14	343	361
15	366	384
16	389	407
17	412	430
18	435	453
19	458	476
20	481	499

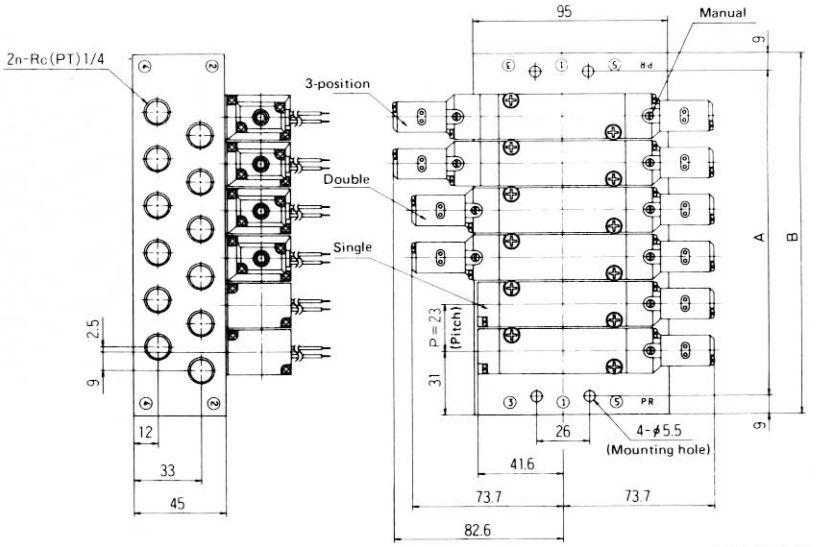

Lead-wire Type

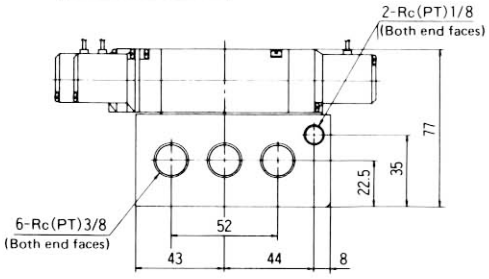

Side Plug Connector

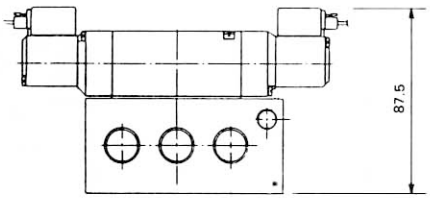

DIN Connector

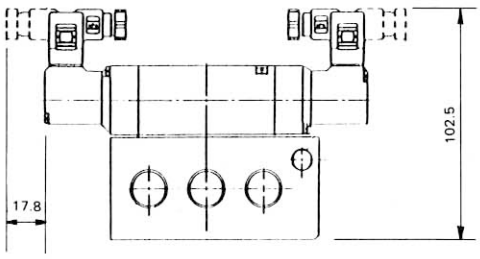

Mini Type 5-Port Solenoid Operated Valve

TZ50 SERIES

With Joinable Type Manifold Base

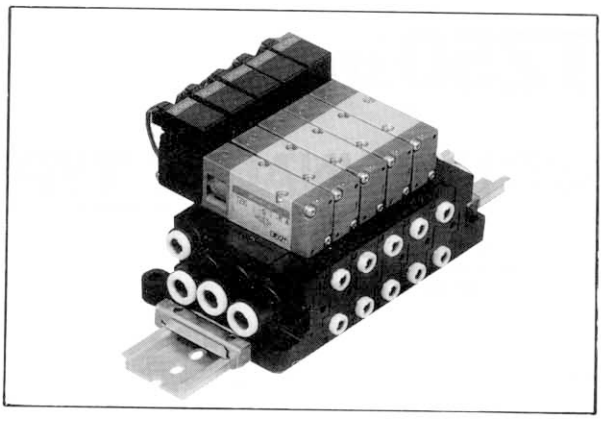

Type Designation(Example)

TZ50 * P - S 1 - WA T - 10CM - C4 HA

(a)Series Name	Code	(b)Port ϕ	Code	(c)Piping Connection
TZ50	*	With quick-fitting	P	Base mount type

Code	(d)Voltage
1	AC100V50/60Hz
2	AC200V50/60Hz
3	DC24V
4	DC12V
9C	AC24V50/60Hz
9D	AC110V50/60Hz
9H	AC220V50/60Hz

Classification	Code	(g)Additional specifications
Manual override	No code	Standard type
	T	Twist type

Code	(i)Output port ϕ
C4	Quick-fitting for ϕ4 tube (outer diam.)
C6	Quick-fitting for ϕ6 tube (outer diam.)

Code	(j)Input-Exhaust port direction
No code	Both ends
HA	Bottom end

Code	Position number	(d)Control Mode	JIS Symbol
S	2-position	Single solenoid	
D		Double solenoid	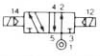
DC	3-position	Closed Center	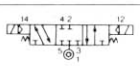
DE		Exhaust Center	
DP		Pressured Center	

Classification	Code	(f)Additional specifications
Wiring system	WA	Lead-wire type
	KA	Side plug connector
	KN	Side plug connector with indicator lamp
	KE	Side plug connector with indicator lamp and surge absorber
	DA	DIN connector
	DN	DIN connector with indicator lamp
	* DF	DIN connector with indicator lamp and surge absorber (Fly-wheel diode)
	* KF	Side plug connector with indicator lamp and surge absorber (Fly-wheel diode)

*: DF and KF can be specified for DC 24V. (Confirm delivery period because these are quasi-standard items.)

Manifold connection system	Code	(h)Number of joinable ※ manifold bases.
Connecting-pin type	2CM	2 bases
	3CM	3 bases
	⋮	⋮
	20CM	20 bases
DIN-rail type	2RM	2 bases
	3RM	3 bases
	⋮	⋮
	20RM	20 bases

Note: Consult New-Era F-series when order involves mounting of two or two or more types of valves on the manifold base.

●Manifold Type

〈Connecting-pin Type〉

Type	Port ϕ (ϕmm)			Input-exhaust direction
	Output	Input-Exhaust	Pilot Exhaust	
nCM-C4 (TZ50)	4	8	6	Both ends
nCM-C4HA (TZ50)	4	8	6	Bottom end
nCM-C6 (TZ50)	6	8	6	Both ends
nCM-C6HA (TZ50)	6	8	6	Bottom end

〈DIN Rail Type〉

Type	Port ϕ (ϕmm)			Input-exhaust direction
	Output	Input-Exhaust	Pilot Exhaust	
nRM-C4 (TZ50)	4	8	6	Both ends
nRM-C4HA(TZ50)	4	8	6	Bottom end
nRM-C6* (TZ50)	6	8	6	Both ends
nRM-C6HA(TZ50)	6	8	6	Bottom end

●Intermediate Base and End Base Type

〈Connection-pin Type〉

	Type	Output (ϕmm)	Input-Exhaust (ϕmm)		Pilot exhaust (ϕmm)	
			Top end	Bottom end	Top end	Bottom end
Intermediate base	PLC (TZ50)	4	—	—	—	—
	PLC6(TZ50)	6	—	—	—	—
End base	ELC (TZ50)	—	8	8	6	6
	EAC (TZ50)	—	—	8	—	6

〈DIN Rail Type〉

	Type	Output (ϕmm)	Input-Exhaust (ϕmm)		Pilot exhaust (ϕmm)	
			Top end	Bottom end	Top end	Bottem end
Intermediate base	PLR4(TZ50)	4	—	—	—	—
	PLR6(TZ50)	6	—	—	—	—
End base	ELR (TZ50)	—	8	8	6	6
	EAR (TZ50)	—	—	8	—	6

●Accessories

Part Name	Type	Details
DIN Rail	BAA500	Full length 500mm
	BAA1000	Full length 1,000mm
DIN Rail Fitting	BR(TZ50)	Two fittings in 1 set.
Silencer	HMC6	For ϕ6 quick-fitting.
	HMC8	For ϕ8 quick-fitting.
Blank plug	31260400	Blank plug for ϕ4 quick-fitting. 10 plugs in 1 set.
	31260600	Blank plug for ϕ6 quick-fitting. 10 plugs in 1 set.
	31260800	Blank plug for ϕ8 quick-fitting. 10 plugs in 1 set.

TZ50 SERIES

WITH JOINABLE TYPE MANIFOLD BASE (CM)

With Joinable Type Manifold

Connecting Pin Type

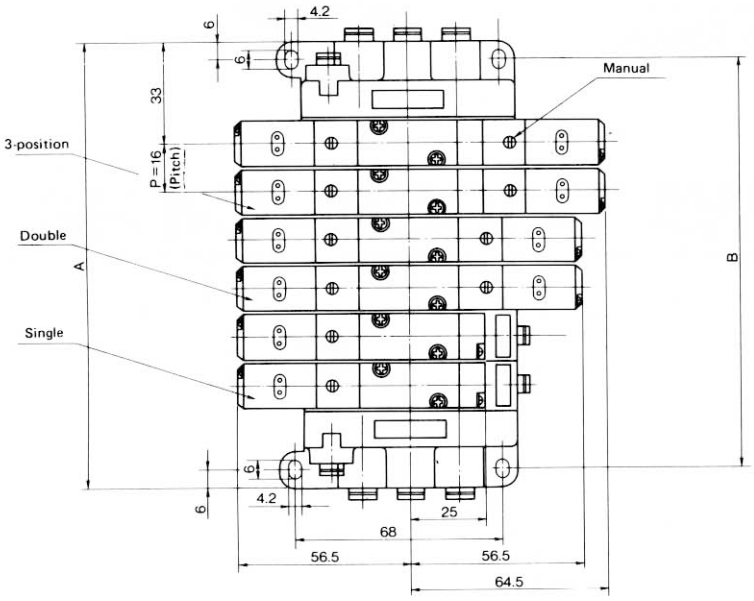

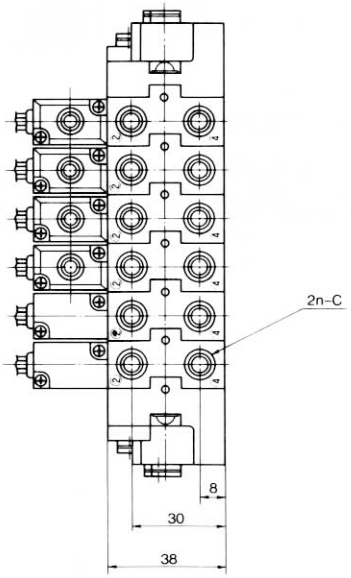

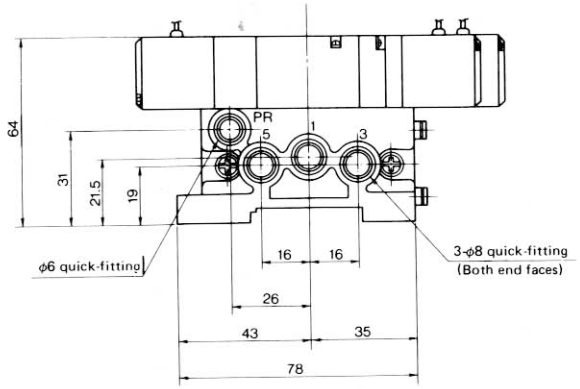

C(Output)
φ4 quick-fitting
φ6 quick-fitting

Number of bases	Dimensions (mm)		Weight (g)	Number of bases	Dimensions (mm)		Weight (g)
	A	B			A	B	
2	82	70	206	12	242	230	706
3	98	86	256	13	258	246	756
4	114	102	306	14	274	262	806
5	130	118	356	15	290	278	856
6	146	134	406	16	306	294	906
7	162	150	456	17	322	310	956
8	178	166	506	18	338	326	1,006
9	194	182	556	19	354	342	1,056
10	210	198	606	20	370	358	1,106
11	226	214	656				

Side Plug Connector

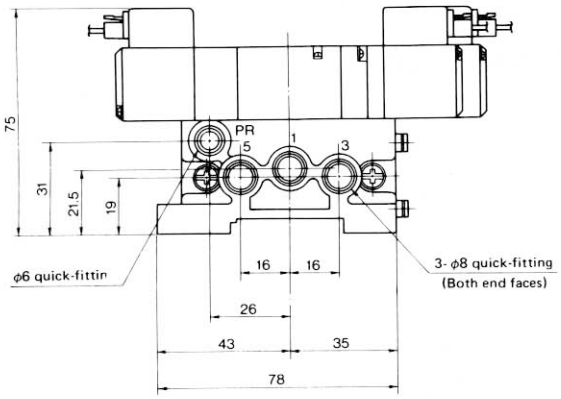

DIN Connector

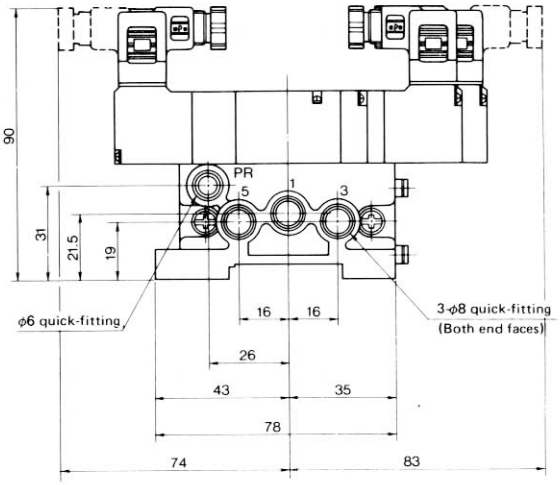

TZ50 SERIES

WITH JOINABLE TYPE MANIFOLD BASE (RM)

With Joinable Type Manifold

DIN Rail Type

Side Plug Connector

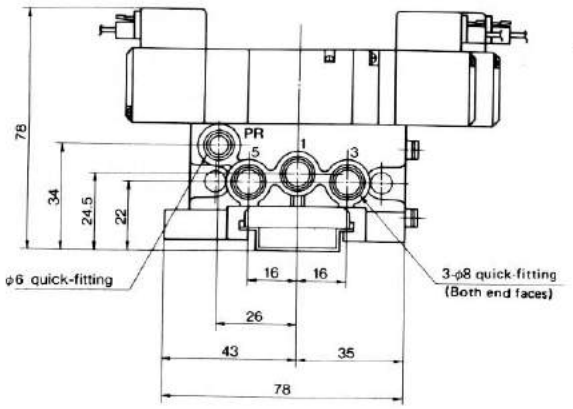

DIN Connector

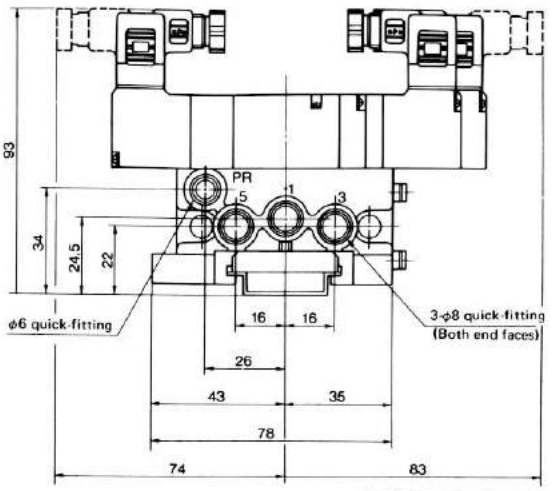

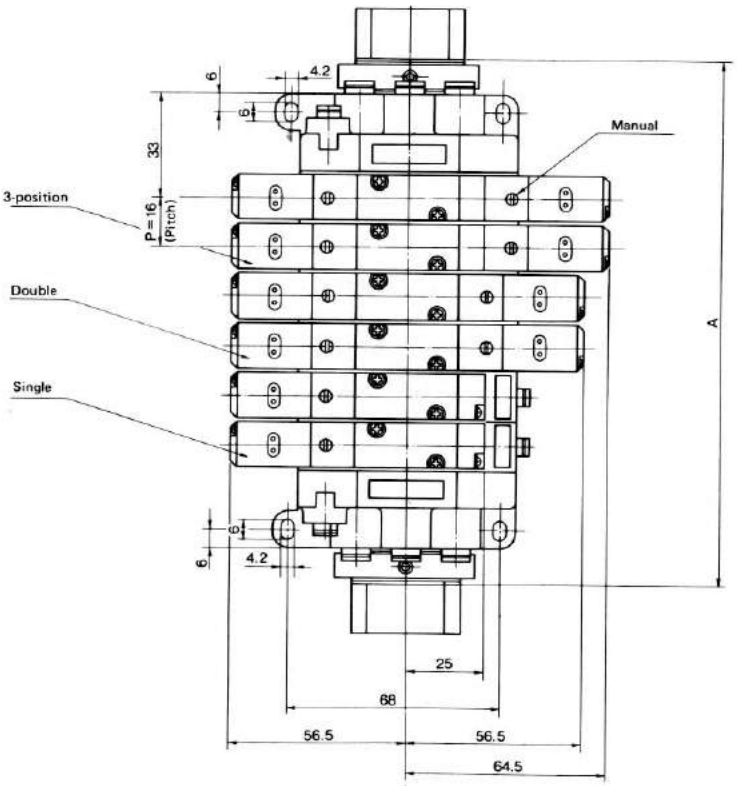

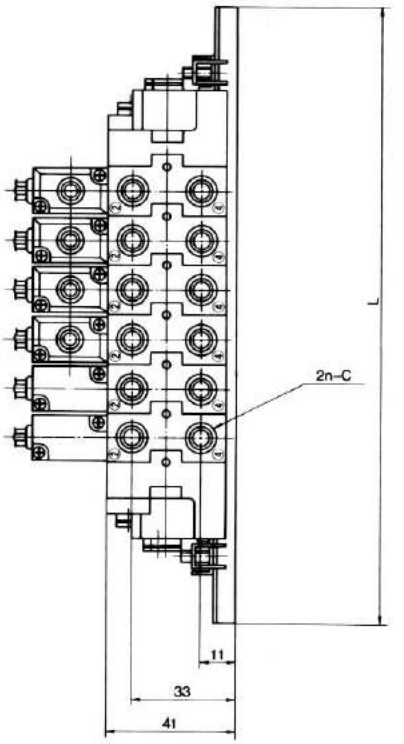

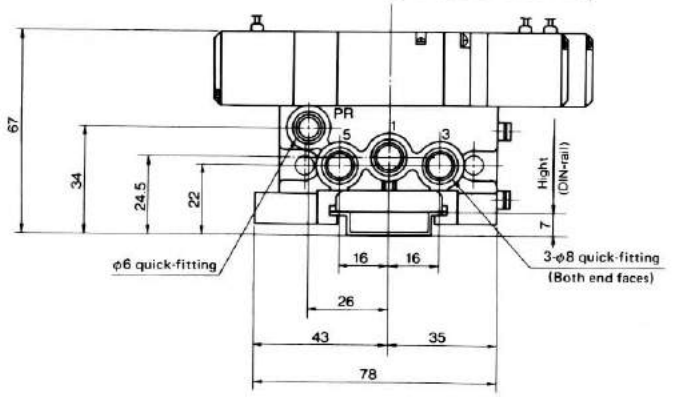

Number of bases	Dimensions (mm)	Weight (g)	Number of bases	Dimensions (mm)	Weight (g)
	A			A	
2	105	204	12	265	568
3	121	241	13	281	605
4	137	277	14	297	641
5	153	313	15	313	677
6	169	350	16	329	714
7	185	386	17	345	750
8	201	423	18	361	787
9	217	459	19	377	823
10	233	495	20	393	859
11	249	532			

● ASSEMBLY PROCEDURE

Connecting Pin Type

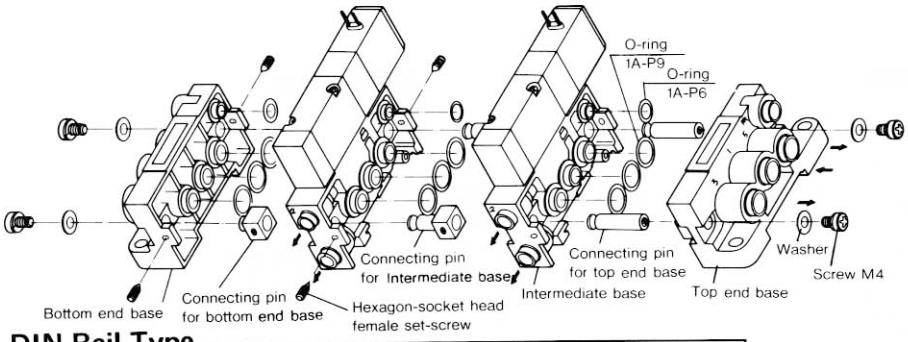

When the valves are ordered as the manifold type, they will be delivered in the assembled state.
However, apply the following procedure when reassembly is required.

1. O-rings (4 rings) are provided on the bottom end base and the intermediate bases. Confirm that all of these O-rings are in place for assembly. (check to confirm that no O-ring is missing.)
2. Insert the connecting pin into the connecting-pin receiving hole of the other base.
3. Clamp securely with the hexagon-socket head female set-screw.

The first intermediate base from the top end base, does not require a connecting pin for an intermediate base. Therefore, remove this pin.

*In case of the connecting pin type, always use a "flat washer" and "spring washer" to clamp the end base on the frame.

DIN Rail Type

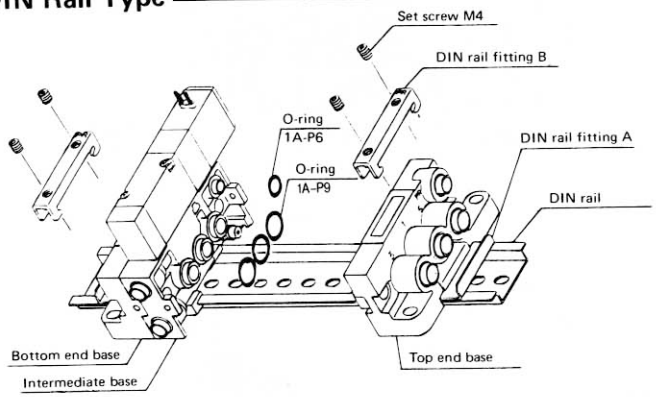

DIN Rail Type

When the valves are ordered as the manifold type, they will be delivered in assembled state on the rail.
However, apply the following procedure when assembly or reassembly is required.

1. O-rings (4 rings) are provided on the bottom base and intermediate bases. Confirm that all of these O-rings are in place for assembly. (Check to confirm that no O-ring is missing.)
2. Place one of the end bases on the DIN rail and clamp temporarily with the set screw of the DIN rail fitting. (Clamp securely after entire assembly is completed.)
3. As shown in Fig. A, mount an intermediate base on the DIN rail and slide it to the side of the end base which was clamped temporarily in above item "2".
   Mount the other intermediate bases in order and press them together on the rail so that there will be no gap between them.
4. Then, push the other end base against the intermediate bases on the rail and clamp securely with the set screw of the DIN rail fitting.
   (Do not forget to securely retighten the set screw of the first end base.)

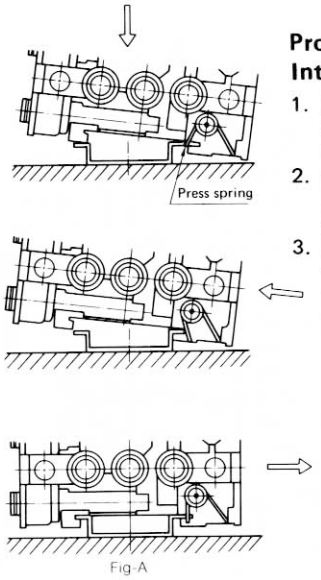

Fig-A

Procedure for Assembly of Intermediate Bases

1. Hook the press spring on the DIN rail and press it lightly against the rail.
2. Slide the base in the arrow direction and catch the hook on the base.
3. Return the base until it contacts the root of the hook. (It will be held by the spring force.)

● Dimensions of Parts

● DIN Rail

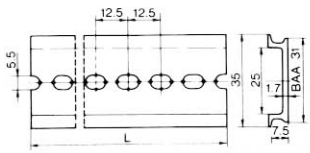

Type	L
BAA500	500
BAA1000	1000

● DIN Rail Fitting

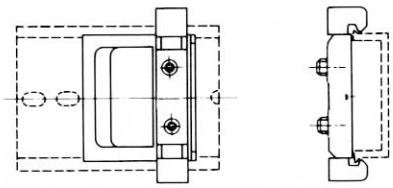

Type
BR (TZ50)

● Blank Plug

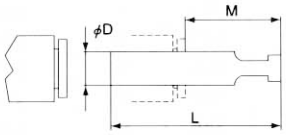

Type	φD	L	M
BC4-01	4	37	22.5
BC6-01	6	39.5	22.5
BC8-01	8	41	23

● Silencer

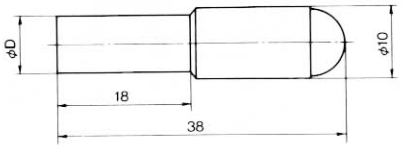

Type	φD
HMC6	6
HMC8	8

● PRECAUTIONS FOR HANDLING

Piping
- Observe precaution to prevent entry of dust, seal tape or other foreign matter into the pipe during piping work.
- For installation of pilot-exhaust port piping of the manifold base and mounting of a muffler; install them properly to minimize the exhaust resistance.

Lubrication
- All valves of this series can be used without supply of lubrication. However, if a lubricant is to be used, use ISO VG32 or ISO VG46.

Leakage Current
- In such case as a sequencer which uses a CR circuit for protection of the switching element against surge voltage; precaution must be observed because the leakage current at the CR element may cause malfunction of the product. (Refer to the diagram of the switch element circuit which is shown on the right.)

Application Environment
- Use these valves in ambient temperature below 50°C.
- When these valves are to be used at a place which is exposed to waterdrops, oi drops, or much dust, etc., provide a cover or other protective measure.
  Also install a silencer, etc. at the exhaust port to prevent dust infiltration.
- Do not use these valves in a corrosive gas environment.
- The side plug connector type of the TZ Series must be protected by enclosing in a box or by some other measure when they are to be used at a place that is exposed to waterdrops or oil drops.

Internal Circuit (Refer to circuit diagram shown on the right.)
- Do not apply a megger test between the lead wires.
- In case of a DC solenoid, there is no polarity. (Except for DF and KF.)
- In case of a double-solenoid, do not energize both solenoids simultaneously because the valves may be put in neutral condition as the result.

Installation
- These valves can be installed freely in any position.
- When the valve is to be used at a place that is exposed to vibra- install in the position where the spool axis will be at right angle to the vibration direction.

Cabtyre Cord for DIN Connector
- The recommended cabtyre cord for the DIN connector are those of 4mm~6.5mm cord diameter and 0.5mm² core size (JIS Symbol: Cabtyre Round Cord VCTF 2-core of 0.75mm² or less in core size.)

Connection and Disconnection of Side Plug Connector
- For connection, grasp the connector and push it into the pin until the lever hook fits in the connector housing groove.
- The plug connector specification products of this series are all of the integral type which consists of the lead wires, contact and connector. Therefore, there is no need for removal of the coating from the wire end to expose the core or compression joint processing, etc.
- The connector can be disconnected easily by holding the connector lever part between your thumb and finger to pull it out of the connector housing.

Compression Joint of Lead-wire and Contact
(For other than standard products.)
- Remove 2.5~3mm of the coating from the lead-wire end to expose the core. Then, insert the core neatly in the contact and compress to clamp the core.
  Observe precaution to avoid clamping the coated wire part in the contact.
  Compression-joint tool: Type No. **H4-M31**
  (For M36 Series Socket Contact)
  Contact Type No.: **M31C8-4**
  (For lead-wire 0.16 0.38mm²) AWG22 25
  M31C8-5
  (For lead-wire 0.08 0.16mm²) AWG26 28
  Connector: Type No. **M36-03**
- The compression-joint tool, contact and connector are products of Mitsumi New Tech. Co. When they are required, obtain them separately.

●Permissible Leakage Current

Voltage	AC100V		AC200V		DC24V	DC12V
	50Hz	60Hz	50Hz	60Hz		
Current	5mA	4mA	3mA	2mA	4mA	7mA

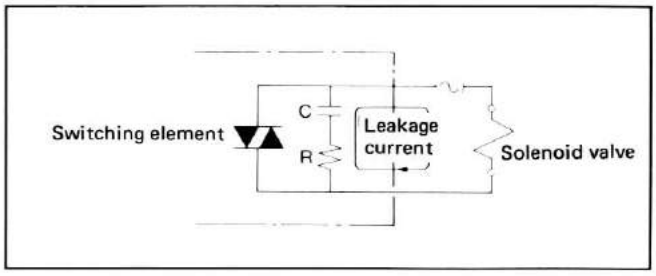
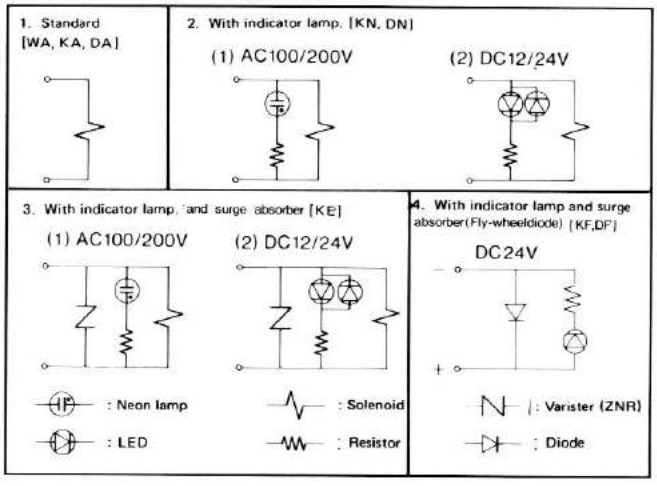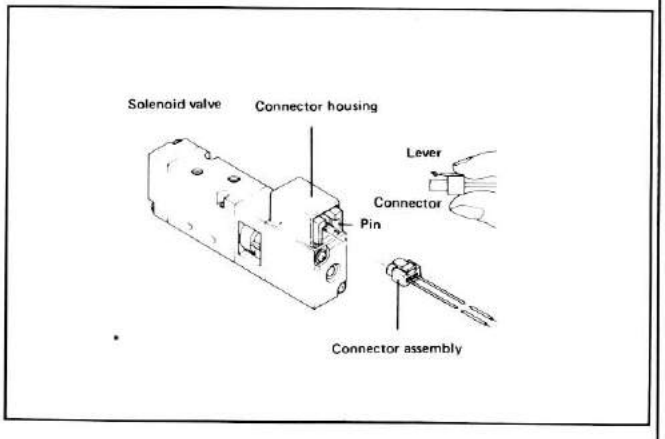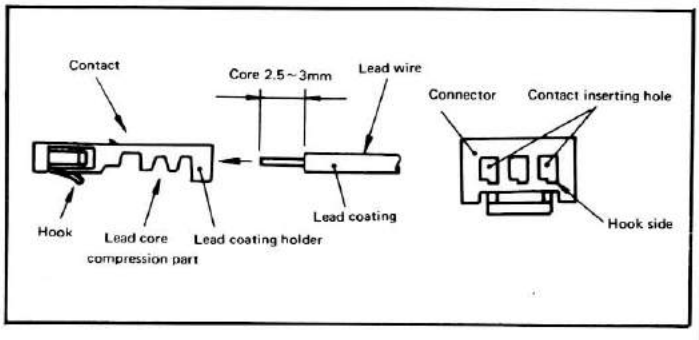
●Internal Circuits of Type Specifications